ENCLOSURE MODEL: 400-AL

JOB: ----

DRAWN BY: MTP | SCALE: NONE | DATE: 1/4/20

SAFE-T-COVER® BY HYDROCOWL
ENCLOSURES DESIGNED FOR THE WORLD'S WATER SYSTEMS™
WEBSITE: SAFE-T-COVER.COM PHONE: (800) 245-6333
EMAIL: SALES@SAFE-T-COVER.COM FAX: (615) 259-4481

6AMC400-NRS12

SHEET 1 OF 1

ELEVATION VIEW

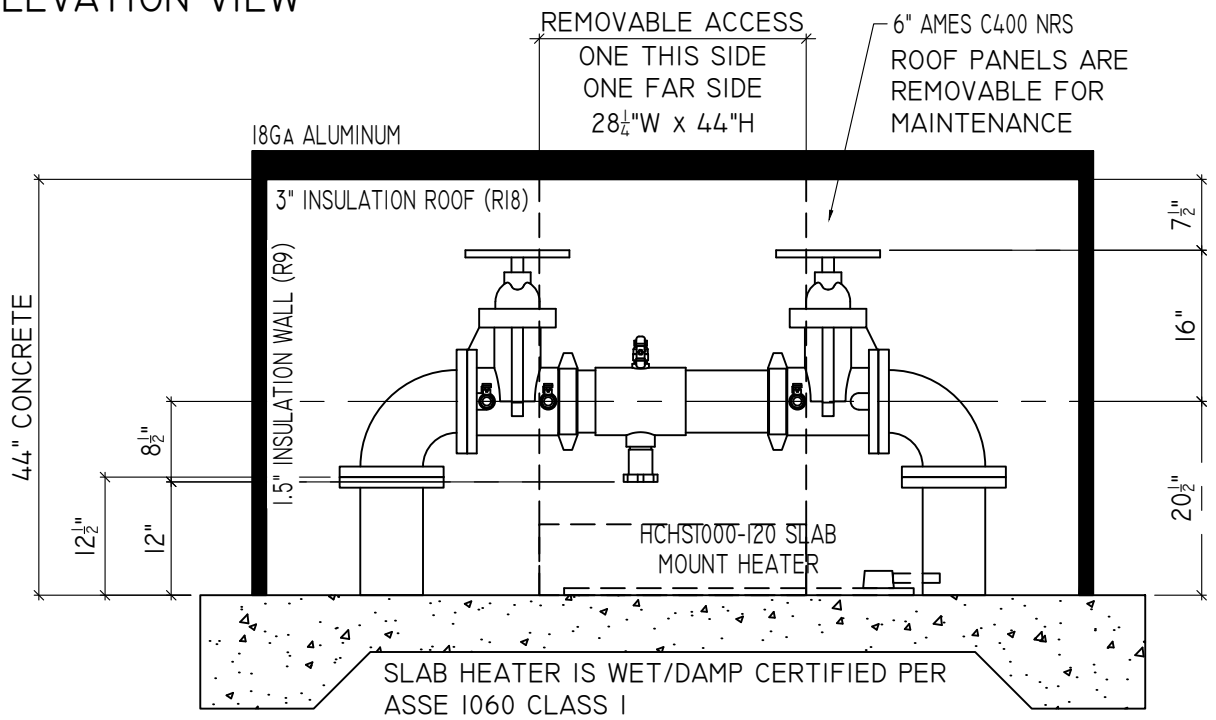

PLAN VIEW

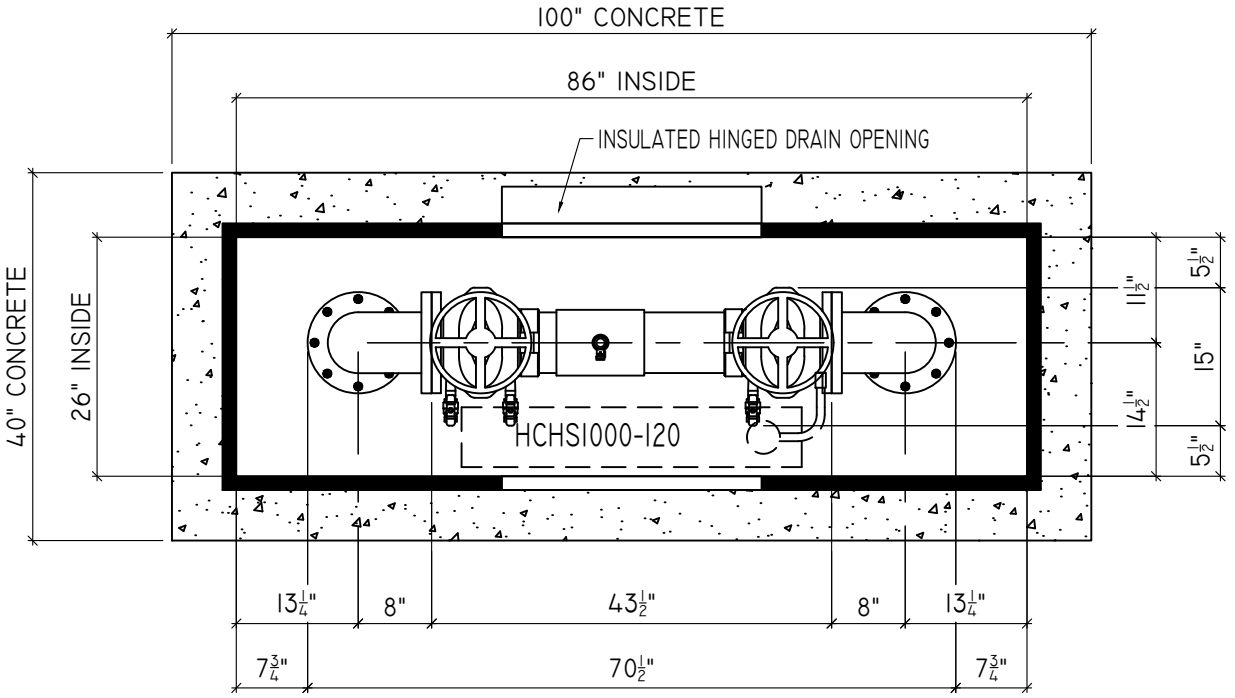

1. DRAWING NOT TO SCALE.
2. BFP DIMENSIONS FURNISHED BY
3. ALL DIMENSIONS ARE IN INCHES. (GASKETS INCLUDED)
4. WALL AND INSULATION THICKNESS IS 1-1/2".
5. ROOF AND INSULATION THICKNESS IS 3".
6. MODEL 400-AL ENCLOSURE
7. ENCLOSURE INSIDE DIMENSIONS:
   26"W X 86"L X 44"H
8. CONCRETE PAD IS 40"W X 100"L
9. BFP - 6" AMES C400 NRS

CONFIDENTIAL: THIS DRAWING IS INTENDED FOR USE ONLY BY THOSE AUTHORIZED TO RECEIVE IT.
DISSEMINATION, DISTRIBUTION OR COPY OF THIS INFORMATION IS STRICTLY PROHIBITED. US PATENT 5,609,784