ENCLOSURE MODEL: 400T-AL		
JOB:		
Drawn By: PP	Scale: NONE	Date: 7-10-13

SAFE-T-COVER™
BY: HYDROCOWL
2710 LANDERS AVENUE, NASHVILLE, TN 37211
615-259-4495, 800-245-6333, 615-259-4481 FAX

6AM4000SS-NRS12

Sheet 1 of 1

ELEVATION VIEW

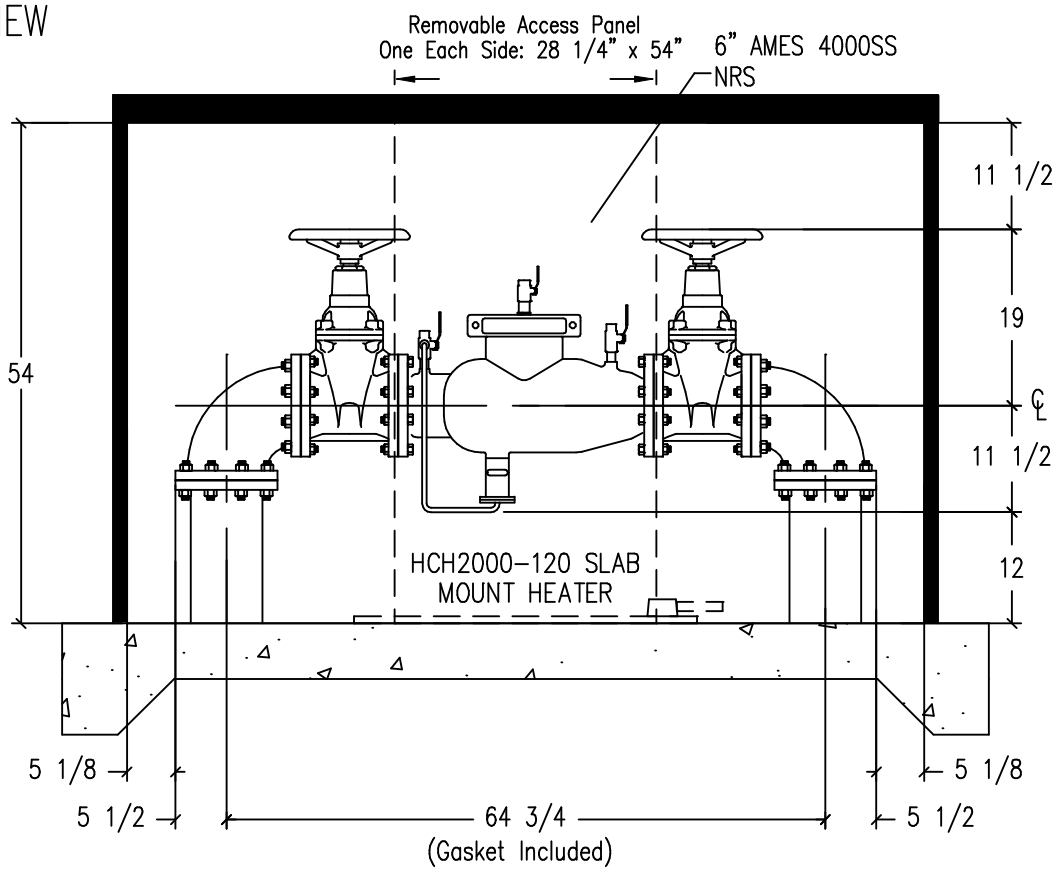

SLAB HEATER IS WET/DAMP CERTIFIED PER ASSE 1060
CLASS I

PLAN VIEW

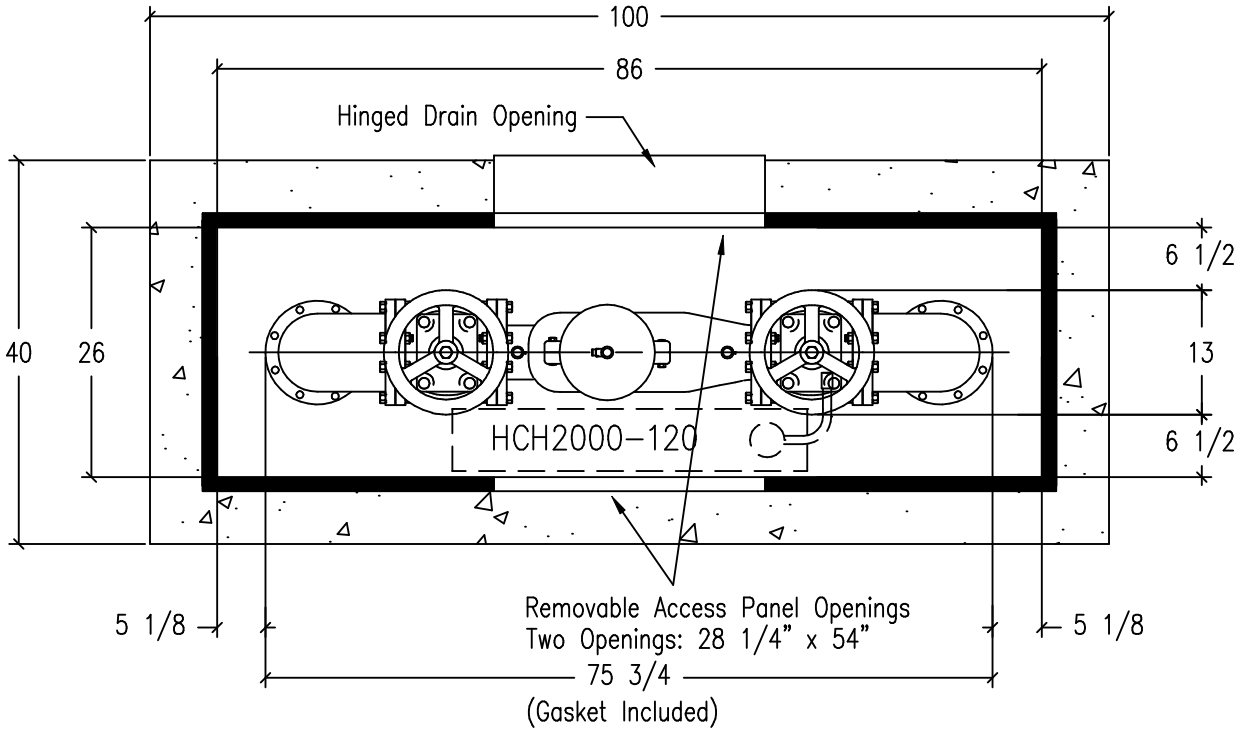

1. Drawing NOT TO SCALE.
2. BFP dimensions furnished by AMES CO.
3. All dimensions are in inches.
4. Wall and insulation thickness is 1-1/2".
5. Roof and insulation thickness is 3".
6. MODEL 400T-AL ENCLOSURE.
7. Enclosure inside dimensions: 26"W x 86"L x 54"H.
8. Concrete pad is 40"W x 100"L.
9. BFP - AMES 6" 4000SS NRS