ENCLOSURE MODEL: 300T-AL

JOB:

Drawn By: PP | Scale: NONE | Date: 8-14-13

SAFE-T-COVER®
BY: HYDROCOWL
2710 LANDERS AVENUE, NASHVILLE, TN 37211
615-259-4495, 800-245-6333, 615-259-4481 FAX

3AM3000SS-OSY12

Sheet 1 of 1

ELEVATION VIEW

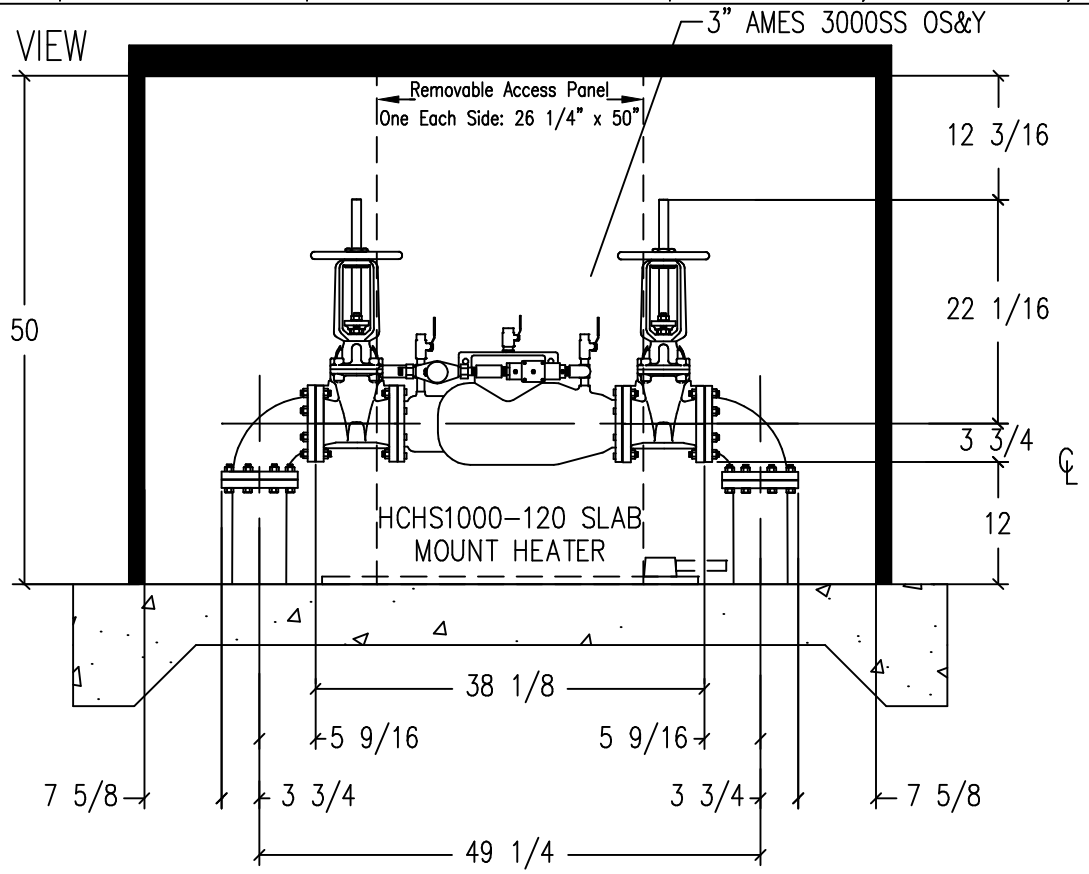

(Gaskets Included)

SLAB HEATER IS WET/DAMP CERTIFIED PER ASSE 1060 CLASS I

PLAN VIEW

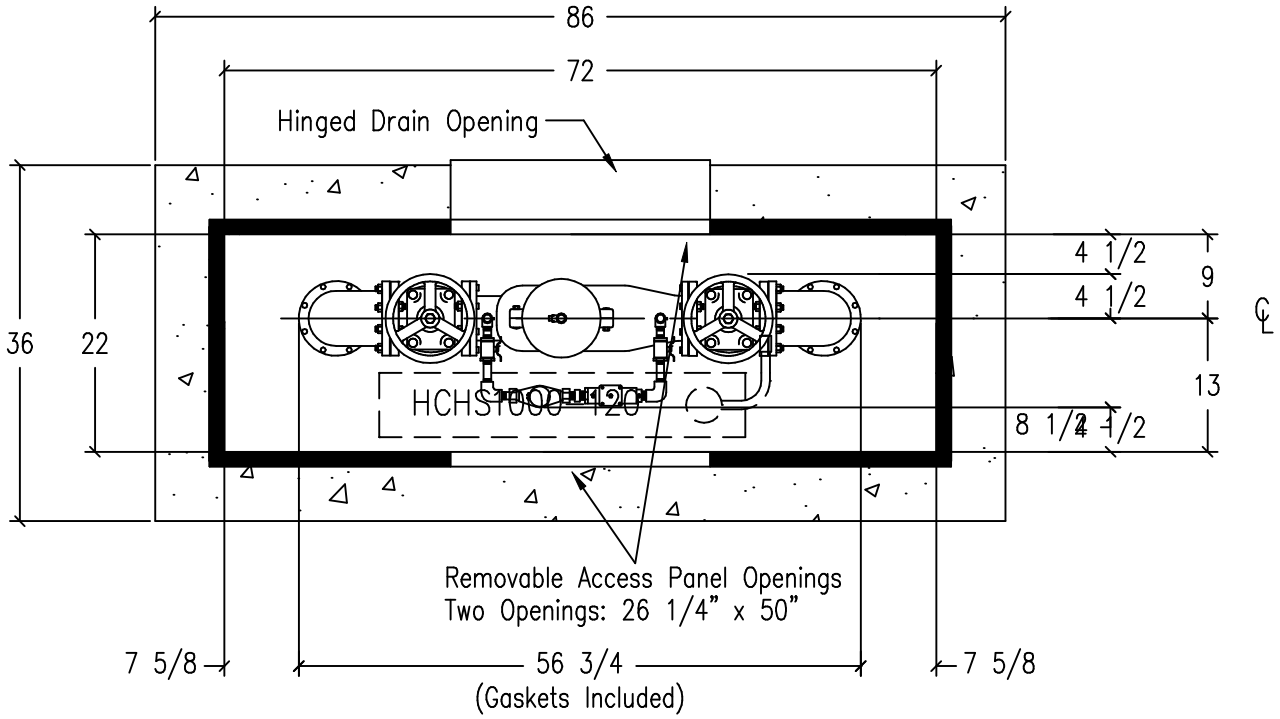

(Gaskets Included)

1. Drawing NOT TO SCALE.
2. BFP dimensions furnished by AMES
3. All dimensions are in inches.
4. Wall and insulation thickness is 1-1/2".
5. Roof and insulation thickness is 3".
6. HYDROCOWL MODEL 300T-AL ENCLOSURE.
7. Enclosure inside dimensions: 22"W x 72"L x 50"H.
8. Concrete pad is 36"W x 86"L.
9. BFP- AMES 3" 3000SS OS&Y